Docusign Envelope ID: D1328ABD-166C-40C3-9485-A06A729A7BB7

CONTRACT NO. 25-149

concluded in Centennial, CO, USA on July 29th, 2025. 30-Jul-2025 | 6:25 AM MDT

by and between:

STOLLE MACHINERY COMPANY LLC, a limited liability company organized and existing under the laws of the State of Colorado, with the registered address at 6949 South Potomac St. Centennial, CO 80112-4036, USA, hereinafter called the "**Seller**", duly represented by:
Ms. Carolyn Crouch – Vice President, authorised to solely represent the Seller,

and

CANPACK Colombia S.A.S., a corporation existing and duly organized in accordance with the laws of Colombia, registered in the Chamber of Commerce the 26th of September of 2017 under the number 02262465 of the book IX, identified with NIT. 901121179, address: Tocancipa (Cundinamarca), Km 1.5 Via Briceno – Zipaquira Vereda Verganzo S. Tibitoc, Colombia, hereinafter referred to as the "**Buyer**", duly represented by:
Mr. Camilo Ernesto Perez Bustos - General Manager, and
Mr. William Peña – Operational Manager.

Having in mind the good repute of the Seller on the market, the position of the Buyer being the supplier of containers to demanding first class clients and a development of a successful co-operation, the Parties have concluded the following Contract:

DS

Docusign Envelope ID: D1328ABD-166C-40C3-9485-A06A729A7BB7

1 SUBJECT OF THE CONTRACT

1.1 The Seller shall sell to the Buyer the following Equipment (hereinafter collectively referred to as "**Equipment**"), as specified in detail in Enclosure No. 1 hereto, for one of the Buyer's aluminium beverage can manufacturing lines located in South America:

1.1.1 One (1) Dynaform 165 Cupping System with One (1) Sixteen (16) outs Die Set for 26.9cl Cansize, One (1) Fifteen (15) outs Die Set for 33cl Cansize, One (1) Fourteen (14) outs Die Set for 35.5cl Cansize, Thirteen (13) outs Dei Set for 47.3cl Cansize and complete coil handling system with Die set safety turnover unit and Critical Spares;

1.1.2 Two (2) 36MRT Concord Decorators with 8 ink stations to run the following can sizes: 47,3cl x 211/202, 35.5cl x 211/202, 33cl x 211/202, 26,9cl x 204/202 and 204/200, in the future ready to 56.8cl x 211/202;

1.1.3 Ten (10) individual DG250 Tall Cabinet Spray with Controls for fourteen machines to run the following can sizes: 47,3cl x 211/202, 35.5cl x 211/202, 33cl x 211/202, 26,9cl x 204/202 and 204/200, in the future ready to 56.8cl x 211/202;

1.1.4 Nine (9) B626 Bodymakers to run the following can sizes: 47,3cl x 211/202, 35.5cl x 211/202, 33cl x 211/202, 26,9cl x 204/202 and 204/200, in the future ready to 56.8cl x 211/202.

1.2 If the Equipment contains any program necessary to operate it, or if any such program is not included but needed, the Seller shall deliver such program together with the Equipment and hereby grants to the Buyer a world-wide, irrevocable and non-exclusive right in perpetuity to use such program in order to operate the Equipment, to modify and/or substitute it or parts of it within scope necessary to adjust it to the modification of the technological line (however, the safety portion of the software shall not be released to be modified), a component of which the Equipment shall constitute, and to dispose of rights to the program within the scope of any disposals of the Equipment (i.e. sale, rent, lease, donation). The program and the rights over such program granted as described hereinabove are included into the Total Price. Whenever the term Equipment is used hereunder it also means the program necessary to operate the Equipment, including but not limited to representations and warranties hereunder as regards the Equipment.

1.3 The Equipment as per par. 1.1 shall constitute components of a D & I beer and beverage 47,3cl x

DS

Docusign Envelope ID: D1328ABD-166C-40C3-9485-A06A729A7BB7

211/202, 35.5cl x 211/202, 33cl x 211/202, 26,9cl x 204/202 and 204/200, in the future ready to 56.8cl x 211/202 aluminum can manufacturing system which nominal output shall be 4000 cans per minute (CPM).

1.4 The Equipment shall comply with the Technical Specification agreed between the Seller and the Buyer and contained in Enclosure No. 1 hereto, constituting an integral part hereof.

1.5 The Technical Specification as per par. 1.4 shall be submitted to the Buyer's engineering company as indicated in par. 16.14 and shall be confirmed by the Buyer's engineering company. The Seller shall be fully responsible for the execution of this confirmation. In case of any problems from the side of the Buyer's engineering company, the Seller shall notify the Buyer about it in writing.

1.6 The Equipment controls shall be Allen-Bradley Control Logix and/or Compact Logic with Ethernet Interface for Line Control and a second Ethernet Interface for HMI and internal VFD communication. The Seller represents and guarantees that it has a perpetual, worldwide and irrevocable right to use the above Allen-Bradley Control Logix in order to use, operate and sell the Equipment and to grant the Buyer the right to operate, use and transfer the rights to the Equipment as per this Contract.

1.7 Electrical system shall be 440V/3ph/60Hz, 4 wires (L1, L2, L3, GND), 3 pole disconnect.

1.8 The Equipment shall conform to:

1.8.1 EU "New Approach" Directives (including, without limitation, 2006/42/EC Machinery Directive and 2014/30/UE Electromagnetic Compatibility Directive), and be CE marked; and

1.8.2 the Regulatory Standards as provided for in Colombian labor legislation, including but not limited to the RETIE (Reglamento Técnico de Instalaciones Eléctricas) standard.

The relevant declarations of conformity and/or certificates confirming the Equipment's conformity with the abovementioned standards and norms shall be provided to the Buyer on or before the delivery date and within the Total Price.

1.9 The Seller shall provide to the Buyer the following services: supervision service during installation, start-up and commissioning and performing Final Acceptance Test of the Equipment ("Services"). The Services may be performed by the Seller or by Seller's affiliated company ("Provider"), if so, ordered by the Buyer, but in any such case the Seller remains fully liable for performance of the Services and remains the only entity entitled to receive fee for performance of the Services. The Seller represents and warrants to the Buyer, that any services ordered in relation to this

DS

Docusign Envelope ID: D1328ABD-166C-40C3-9485-A06A729A7BB7

Contract and performed by its affiliated companies are subject to the terms and conditions of this Contract, and that the Seller shall be liable for any acts and omissions of such Providers when performing services to the Buyer, in particular with respect to the terms on governing law and jurisdiction. The exact calculation of the fee for the Services shall be done according to provisions of par. 3.4. - 3.6. below.

1.10 The Seller is fully responsible for (i) providing a sufficient number of technicians in order to render the Services set forth herein, and (ii) adopting all necessary measures and incurring in all costs to obtain the applicable permissions or visas to allow the technicians to enter into and provide the services in the territory of the Colombia.

1.11 Notwithstanding any provision of this Contract, the Seller undertakes to comply with all applicable labor and social security legislation while rendering to the Buyer any services whatsoever. The Seller undertakes, without any limitation to the foregoing, (i) to pay on time and according to applicable legislation any and all individuals employed for the rendering the service to the Buyer; (ii) to provide any individual employed for the rendering services to the Buyer with all applicable personal safety equipment and to inspect and assure its actual use by the individuals, and (iii) to assure that such individuals will comply fully with any and all safety instructions or policies of the Buyer. The Parties expressly acknowledge that this Contract does not create any employment relationship between Buyer and the Seller or individuals which are employed by the Seller for the rendering services. Hence, the Seller undertakes to immediately bear any and all costs, expenses, losses and damages in relation to lawsuits or administrative proceedings of any nature whatsoever, including but not limited to individual labor claims, that might be brought against the Seller in regard to these individuals.

1.12 The Seller represents to the Buyer that:

a) the Equipment has been fully developed by the Seller,
b) the Seller has the full, clear, unencumbered and valid title to transfer the ownership of the Equipment to the Buyer,
c) the Equipment shall be manufactured in the USA,
d) no third persons, especially employees of the Seller or co-operators or alike, have any rights to the Equipment,
e) there are no circumstances restricting the Seller's right to conclude this Contract according to the terms and conditions set forth in it,

DS

Docusign Envelope ID: D1328ABD-166C-40C3-9485-A06A729A7BB7

f) no third party rights (including but not limited to patents and industrial designs relating to the Equipment) were infringed in connection with the development of the Equipment by the Seller and/or purchasing Equipment by the Buyer, with using the Equipment for manufacturing its products and/or by any method and/or process applied in connection with the use of the Equipment, process applied in connection with the use of the Equipment and/or the apparatus as the Equipment is a part of,

g) no proceedings or disputes relating to the rights of the Seller to Equipment are being conducted or threatened and there are no grounds for the commencement of such proceedings or disputes,

h) the Seller has the power to execute this Contract and to perform its obligations under this Contract and has taken all necessary action to authorize such execution and performance,

i) execution and performance of the Contract by the Seller do not violate or conflict with any law applicable, any provision of its internal and/or corporate documents, any order or judgment of any court or other agency of government applicable to the Seller or any of its assets or any contractual restriction binding on or affecting it or any of its assets,

j) the Seller's commitments under this Contract constitute its legal, valid and binding obligations, enforceable in accordance with their respective terms (subject to applicable bankruptcy, reorganization, insolvency, moratorium or similar laws affecting creditors' rights generally and subject, as to enforceability, to equitable principles of general application),

k) all information that is furnished in writing by or on behalf of the Seller to the Buyer is true, accurate and complete in every material respect,

l) documentation to be delivered by the Seller according to the Enclosure No. 2 and any other documentation provided by the Seller with respect to this Contract ("Documentation"), will be complete (including all drawings, manuals), correct, true, valid and complying with the provisions of the present Contract, and that the Seller holds the exclusive and unrestricted copyright to the Documentation and no third parties' rights, especially employees of the Seller or co-operators or alike, were and/or will be infringed in connection with the development, delivery of the Documentation to the Buyer and use of the Documentation. Upon the delivery the Documentation, within the Total Price, the Seller hereby grants to the Buyer unrestricted right to use it in order to operate the Equipment and dispose of rights to the Documentation within the scope of any disposals of the Equipment. Whenever the term Equipment is used hereunder it also means the Documentation necessary to operate the Equipment and given in Enclosure

DS

Docusign Envelope ID: D1328ABD-166C-40C3-9485-A06A729A7BB7

No. 2 and any other documentation provided by the Seller with respect to this Contract , including but not limited to representations and warranties hereunder as regards the Equipment,

m) the Equipment shall be in compliance with all applicable laws, including, without limitation, all federal, state and local laws, ordinances, regulations, standards, rules, requirements, and policies, administrative rulings, court judgements and decrees, and all amendments thereto, including those imposed by any governmental or regulatory authority and any local regulatory requirements and all applicable industry standards which apply from time to time to the supply or use or re-sale of the Equipment in those countries where this Contract will be performed, including but not limited to regulations related to protection of environment, health and safety in Colombia,

n) the services provided by the Seller shall be in compliance with statutory regulations related to health and safety rules (including protective clothing for Seller's technicians and other employees) in the place where services are performed; the Seller shall instruct its employees about the abovementioned statutory regulations,

o) the Seller shall observe all applicable laws and standards on discrimination at work (sex, race, ethnic background, religion, world-view, disability, age, sexual orientation) and it shall not make use of slave or children labor.

2. DELIVERY TIME

2.1. The Equipment specified in par. 1.1 hereof shall be delivered FCA, with the following schedule:

2.1.1. Equipment specified in par. 1.1.1, 1.1.2 FCA Seller's plant Centennial US, according to Incoterms 2020 and 1.1.4 FCA Seller's plant Brazil, according to Incoterms 2020 on or before August 24, 2026, and

2.1.2. Equipment specified in par. 1.1.3 FCA Seller's plant Brazil on or before August 31, 2026.

2.2. The Buyer shall not be obliged to pick the Equipment up earlier than on the abovementioned dates. The Parties agree that time of delivery is of the essence.

2.3. The Equipment shall only be delivered after having passed the Preliminary Acceptance Test specified in Section 5 of this Contract with a positive result.

2.4. The Seller shall deliver Documentation as per Enclosure No. 2.

2.5. The term „delivery" shall mean the date of delivery of last piece of Equipment, so that the Equipment and each part thereof has been delivered to the Buyer.

DS

Docusign Envelope ID: D1328ABD-166C-40C3-9485-A06A729A7BB7

3. PRICES

3.1. The Total Price for the Equipment is USD 19 396 648,00 (say: nineteen million three hundred ninety-six thousand six hundred forty-eight 00/100; "**Total Price**") as specified in detail in Enclosure No. 3.

3.2. The Total Price shall be final and unchangeable and includes inter alia adequate packing as per Section 11 of this Contract. The Seller shall have no rights to demand supplementary payments or any price alterations.

3.3. The Total Price includes:

Item	Description	QTY	Price [USD]
1.1.1	One (1) Dynaform 165 Cupping System with One (1) Sixteen (16) outs Die Set for 26.9cl Cansize, One (1) Fifteen (15) outs Die Set for 33cl Cansize, One (1) Fourteen (14) outs Die Set for 35.5cl Cansize, Thirteen (13) outs Dei Set for 47.3cl Cansize and complete coil handling system with Die set safety turnover unit and Critical Spares	1	5 885 310,00
1.1.2	Two (2) 36MRT Concord Decorators with 8 ink stations to run the following cansizes: 47,3cl x 211/202, 35.5cl x 211/202, 33cl x 211/202, 26,9cl x 204/202 and 204/200, in the future ready to 56.8cl x 211/202	2	5 604 160,00
1.1.3	Ten (10) individual DG250 Tall Cabinet Spray with Controls for fourteen machines to run the following cansizes: 47,3cl x 211/202, 35.5cl x 211/202, 33cl x 211/202, 26,9cl x 204/202 and 204/200, in the future ready to 56.8cl x 211/202	1	1 963 735,00
1.1.4	Nine (9) B626 Bodymakers to run the following cansizes: 47,3cl x 211/202, 35.5cl x	9	5 943 443,00

Docusign Envelope ID: D1328ABD-166C-40C3-9485-A06A729A7BB7

	211/202, 33cl x 211/202, 26,9cl x 204/202 and 204/200, in the future ready to 56.8cl x 211/202		
			19 396 648,00

3.4. The Parties agree that the fee for the Seller's services ("Service Fee") shall be calculated according to the following rules:

SYSTEM COMMISSIONING CONTRACT SERVICE RATES ELECTRICAL/MECHANICAL/TRAINING/START UP		
	Description	**Rate in USD /Day**
Day Rate (up to 12 hour working day)	Weekdays	$1,448
	Saturday	$1,592
	Sunday/Holiday	$2,172 / $4,344
Overtime Hourly Rate	Weekdays	$121/hr
	Saturday	$133/hr
	Sunday/Holiday	$181 / $362 /hr
	Travel time-per day	$1,448
	Stand-by day	Rate assigned above for particular day.

3.5. The Buyer shall cover the cost of the Seller's personnel roundtrip air ticket with the following conditions: for flights within one continent in economy class and for intercontinental flights in business class, per diem, and lodging in the place of installation of the Equipment. The Buyer is responsible for all ground transportation expense. The Buyer shall have the right, at the Buyer's choice, to arrange adequate accommodation for the Seller's personnel and settle related costs directly with the third-party providers.

3.6. The invoice for the Services shall be issued subject to the time sheet confirmed by the Buyer indicating the rates as per par. 3.4 and costs as per par. 3.5, if covered by the Seller, under condition that the Final or Conditional Acceptance Test is executed subject to Section 12 of this Contract. The Service Fee shall be paid within sixty (60) days following the date of receipt of the invoice by the Buyer.

3.7. The Service Fee includes any and all federal, state or local sales, use, property, exercise, services or other taxes now or hereafter levied on the Seller.

4. PAYMENT TERMS

4.1. The Total Price shall be paid by the Buyer to the Seller as follows:

DS

Docusign Envelope ID: D1328ABD-166C-40C3-9485-A06A729A7BB7

4.1.1. 20% of the Price of the Equipment as per 1.1.1 and 1.1.2 - down payment by means of wire transfer not later than on January 15th 2026 and of the Equipment as per 1.1.3 and 1.1.4 - down payment by means of wire transfer not later than on March 1st 2026;

4.1.2. 70% of the price of individual piece of Equipment as specified in par. 3.3 - by means of wire transfer within ninety (90) days from the delivery of the respective piece of Equipment as per par. 2.1 against properly issued shipping documents;

The Buyer shall have the right not to effect the abovementioned payments until the Seller provides the Buyer with all properly issued documents.

4.1.3. 10% of the individual piece of Equipment as specified in par. 3.3 – by means of wire transfer:

4.1.3.1. against the presentation of the Final Acceptance Test Protocol for the given piece of Equipment, executed at the plant in the Place of Destination, accepted by Project Manager – Mr Mirosław Hawran or Mr Pawel Michalowski or Mr Lukasz Dobrzanski, against the invoice issued after the Final Acceptance Test Protocol for each piece of Equipment; or

4.1.3.2. in the circumstances described in par. 12.5, against the presentation of Conditional Acceptance Test Protocol for the given piece of Equipment, executed at the plant in the Place of Destination, accepted by Project Manager – Mr Mirosław Hawran or Mr Pawel Michalowski or Mr Lukasz Dobrzanski, against the invoice issued after the Conditional Acceptance Test Protocol for each piece of Equipment.

4.2. All payments to the Seller are to be made as per the banking instructions attached as per Enclosure No. 4.

4.3. Seller declares that:

4.3.1. Original invoice indicating country of origin, specification, Harmonized CODE (HSCODE), net weight and gross weight of each equipment/item should be shown on invoice and packing list. Prior to sending the original invoice, the draft of the invoice, packing list should be sent to the Buyer by email first on sylwia.kutnik@canpack.com to check and confirm the draft. Once confirmed all original documents are required to be sent to the Buyer as per the address mentioned in par. 8.5;

Docusign Envelope ID: D1328ABD-166C-40C3-9485-A06A729A7BB7

4.3.2. packing list will be provided with every shipment.

5. INSPECTION AND TESTING. TRAINING OF THE BUYER'S PERSONNEL

5.1. It is the Seller's obligation to perform with positive result before the delivery of the Equipment, a Preliminary Acceptance Test of the Equipment with participation of the Buyer or the Buyer's representative. The Preliminary Acceptance Test shall be deemed as performed with positive result only when the Preliminary Acceptance Test Protocol confirming the preliminary acceptance of the Equipment is signed by the Buyer or the Buyer's representative. The Preliminary Acceptance Test of the Equipment shall be carried out at the Seller's premises prior to shipment. The Buyer or the Buyer's representatives shall have the right to inspect the Equipment before the Preliminary Acceptance Test.

5.2. The inspection of the Equipment shall be carried out at the Seller's plant in the operation and servicing of all offered Equipment.

The Buyer shall supply free of charge to the Seller for performance of the Preliminary Acceptance Test a minimum amount of 10,000 lbs coil of body stock for the Equipment as per par. 1.1. to facilitate the Preliminary Acceptance Test run. These materials shall be at the Seller's plant one (1) month before the agreed date of the Preliminary Acceptance Test. The Seller shall inform the Buyer about estimate date of the Preliminary Acceptance Test no later than three (3) months in advance to enable the Buyer to deliver the materials. Any quantity of body stock or cans not used during the Preliminary Acceptance Test run shall be returned to the Buyer at the time of Equipment shipment. All scrap (and the value of the scrap) generated from this Preliminary Acceptance Test run shall become the property of the Seller.

5.3. The Seller's notification of the readiness of the Equipment for the inspection, training and the Preliminary Acceptance Test (also referred to as the „buy–off") shall be received by the Buyer not later than twenty-one (21) days prior to the beginning of the Preliminary Acceptance Test and training period.

5.4. In the event the Seller confirms the readiness of the Equipment for „buy–off", and after the arrival of the Buyer or the Buyer's representatives at the Seller's plant, the Equipment should not be ready to be „bought-off", the Seller shall pay for reasonable travel and living expenses to allow the Buyer or its representatives to stay at the Seller's plant or leave and return to conclude the „buy-off" when

DS

Docusign Envelope ID: D1328ABD-166C-40C3-9485-A06A729A7BB7

the Equipment is ready. Then the Equipment shall again be subject of a Preliminary Acceptance Test. Nevertheless, the above does not exclude the Seller's liability for not delivering the Equipment on time.

5.5. After the Preliminary Acceptance Test, when the Equipment meets the contractual requirements, an authorized representative of the Buyer shall sign the respective Preliminary Acceptance Test Protocol confirming the preliminary acceptance of the Equipment. For avoidance of doubt the Preliminary Acceptance Test shall not be deemed as the confirmation of the compliance of the Equipment with any performance criteria specified in the Contract. The Buyer may authorize an engineering company to carry-out the buy-off procedure in its name.

5.6. Should it be ascertained in the process of any of the Preliminary Acceptance Test carried out in the presence of the Buyer or Buyer's representative that the Equipment is defective or does not comply with the contractual terms, the Seller shall eliminate such defects. After elimination of the defects the Equipment shall undergo a repeated Preliminary Acceptance Test.

5.7. The Seller may perform the Preliminary Acceptance Test on its own, if the Buyer informs the Seller in advance, in writing that it waives its right to participate in the Preliminary Acceptance Test and accept the Preliminary Acceptance Test Protocol.

5.8. The Seller shall provide the Buyer with training of the Buyer's employees concerning operating and servicing of the Equipment. The price for training is included in the Total Price. The training can be accomplished according to Seller's training program provided that the Seller shall accept modifications of that program proposed by the Buyer, if they are of standard nature and do not impose any extraordinary burden on the Seller. The training in Seller's facility shall involve classroom sessions and „hands on" practice with Equipment and tooling. The training shall cover: Theory, Functions of Components, Setup Procedure, Operations, Tooling, Electrical Controls, Preventive Maintenance, Safety, Lubrication, Troubleshooting, Specification and Quality Control.

6. PENALTY CLAUSE

6.1. If the Seller fails to meet the time of delivery specified in par. 2.1 hereof, the Seller shall pay the penalty as follows:

(i) First week of delay – grace period;

DS

Docusign Envelope ID: D1328ABD-166C-40C3-9485-A06A729A7BB7

(ii) Two weeks of delay – 0.5% of the Total Price;

(iii) Three weeks of delay – Additional 0.5% of the Total Price so in total 1% of the Total Price;

(iv) Four weeks of delay – Additional 1% of the Total Price so in total 2% of the Total Price;

(v) Five weeks of delay – Additional 1% of the Total Price so in total 3% of the Total Price;

(vi) Six weeks of delay – Additional 1% of the Total Price so in total 4% of the Total Price;

(vii) Seven weeks of delay – Additional 1 % of the Total Price so in total 5% of the Total Price,

up to maximum five percent (5%) of the Total Price. Should the damage sustained by the Buyer exceed the amount of the penalty, the Buyer shall be entitled to claim the appropriate supplementary compensation.

6.2. The Seller shall be exempt from the penalty indicated in par. 6.1. of this Contract, only if it proves that it has not been able to deliver the Equipment on time according to par. 2.1. of this Contract due to a shortage of components in the market caused directly by global supply chain disruptions impacting the global market of components required to manufacture the Equipment in an extraordinary way (the "**Global Supply Chain Crisis**"), provided that:

(i) such Global Supply Chain Crisis and the resulting delay in delivery of the Equipment could not have been controlled and predicted at the moment of signing of this Contract

and

(ii) the Seller has exercised its best efforts to avoid the consequences of such Global Supply Chain Crisis and the resulting delay in delivery of the Equipment

and

(iii) the Seller has as soon as possible notified the Buyer in writing about the delay in delivery of the Equipment, the exact reasons of delay and its likely or potential duration

and

(iv) the Seller has used its best endeavors to mitigate the effects of such delay on the Buyer.

6.3. The Seller hereby confirms that it has implemented an adequate contingency and disaster recovery plan outlining how it will manage the Global Supply Chain Crisis and any other factors that could disrupt the delivery of the Equipment to the Buyer, including but not limited to by securing substitute components of identical quality or alternative supply sources, to ensure that it delivers

DS

Docusign Envelope ID: D1328ABD-166C-40C3-9485-A06A729A7BB7

the Equipment according to this Contract with no additional costs for the Buyer.

7. SELLER'S GUARANTEE AND WARRANTY

7.1. The Seller warrants to the Buyer that the Equipment and Services furnished by the Seller shall conform to performance specifications and requirements as stated in this Contract and Enclosures hereto, shall be in compliance with representations made under Section 1 hereof, shall be in compliance with current technological knowledge and the latest good technological standards, and shall be suitable for its intended purpose, as defined in this Contract, and free of any defects. The Equipment delivered hereunder shall be brand new and shall not contain any used components whatsoever.

7.2. The Seller warrants and guarantees that the Equipment and all parts thereof (including, but not limited to, any program as described under par. 1.2 hereof) may be used by the Buyer for manufacturing of its products and such a use on an industrial scale will not violate any intellectual property rights of any third party, including (but not limited to) patents and industrial designs relating to any apparatus being a part of the Equipment and/or to any method and/or process applied in connection with the use of such an apparatus and/or product which may be manufactured with the use of such an apparatus. In particular, the Buyer shall not be restricted in:

7.2.1 manufacturing its products using the apparatus being a part of the Equipment or using any method or process applied in connection with the use of such an apparatus;

7.2.2 sale or disposal of such products (including rent, lease, donation) on any market.

7.3. The Seller further warrants to the Buyer that the Equipment and Services furnished by the Seller under this Contract shall be suitable for their intended purpose – i.e. easy integration into the technological line for production of aluminium can bodies: 47,3cl x 211/202, 35.5cl x 211/202, 33cl x 211/202, 26,9cl x 204/202 and 204/200, in the future ready to 56.8cl x 211/202 aluminum can manufacturing system which nominal output shall be 4000 cans per minute (CPM). The Equipment to be purchased by the Buyer hereunder shall constitute a part of designated line, but the intended purpose of each part is to enable (not to disable or prevent) to achieve the expected as well as described capacity and quality.

DS

Docusign Envelope ID: D1328ABD-166C-40C3-9485-A06A729A7BB7

7.4. The Seller warrants that its Services shall be performed by competent personnel and shall be of professional quality consistent with generally accepted industry standards for performance of such services.

7.5. The Seller further guarantees proper functioning with the stated efficiency of the delivered Equipment, proper faultless material, reliable serviceable design and full continuous conformity of the Equipment with requirements of this Contract and Enclosures hereto, for the period of eighteen (18) months from the date of signing the Final Acceptance Test Protocol for each piece of Equipment separately, provided that the result of the Final Acceptance Test is positive. The warranty period shall begin no later than two hundred fifty (250) days from the delivery date if the Final Acceptance Test for the given piece of Equipment was not successfully performed due to the Buyer's fault.

7.6. Any non-conformity of the Equipment with this Contract and Enclosures, representations or warranties of the Seller, shall be deemed as defect of the Equipment.

7.7. In the event of a claim by the Buyer under the provisions of this warranty, the Buyer shall notify the Seller as follows:

7.7.1 The Buyer shall notify the Seller, by a confirmed e-mail (to the e-mail address: carolyn.crouch@stollemachinery.com) of the claim;

7.7.2 The Buyer shall deliver, in writing (including e-mail) to the Seller, detailed information clearly defining the item(s) claimed under this warranty.

7.8. Upon receipt of the notice of warranty claim from the Buyer, in accordance with par. 7.7 above, the Seller shall respond as follows:

7.8.1 The Seller shall respond to the Buyer's claim as quickly as possible, however, not later than within forty-eight (48) hours from receipt of the detailed account of the claim (as defined above) to determine what corrective action, if any, is required.

7.8.2 If any item is found to be defective during or before the warranty period, the Buyer shall be entitled to demand the Seller immediately, but not later than within forty-five (45) days from receipt of the claim, to repair or replace the defective item and carry out any other necessary work to ensure that the terms of the Contract are fulfilled at no cost to the Buyer. The Seller shall inter alia cover all replacement costs incurred by the Buyer due to defects. In case

DS

Docusign Envelope ID: D1328ABD-166C-40C3-9485-A06A729A7BB7

of parts replacement the warranty period for the Equipment shall be extended by the period when the part was defective until it was successfully replaced and installed.

7.9. The Buyer is entitled to rescind the Contract if the Seller fails to remedy in reasonable time the defects or to supply suitable spares. Par. 12.6 shall apply respectively.

7.10. The Seller shall guarantee the supply of spare parts for the Equipment it delivers, for the period of minimum 10 (ten) years.

8. TRANSPORT AND NOTIFICATION OF READINESS

8.1. The Seller shall provide to the Buyer at least twenty-one (21) days before delivery, the following information:

a) number of the Contract;
b) the Equipment's description with Harmonized Code (HSCODE);
c) estimated net/gross weight, size, and number of cases (the final data shall be provided by the Seller five (5) days before scheduled delivery);
d) date of delivery.

8.2. After dispatch the Seller shall immediately deliver to the Buyer the following documents:

a) invoice and specification, and
b) packing list.

8.3. The Seller agrees to cooperate with forwarders and carriers nominated by the Buyer for shipment of the Equipment.

8.4. The Seller represents and warrants that it shall be fully liable for non-fulfilment or improper fulfilment of the provisions set forth above. The Seller shall reimburse to the Buyer any and all costs, charges, fees, penalties etc. borne by the Buyer as a result and in case of a breach by the Seller of the aforementioned obligations and commitments.

8.5. After dispatch the Seller shall immediately deliver all original documents: invoice, packing list and Certificate of Origin to the Buyer by courier to below address: Attn: Mrs. Sylwia Kutnik sylwia.kutnik@canpack.com.

DS

Docusign Envelope ID: D1328ABD-166C-40C3-9485-A06A729A7BB7

9. FORCE MAJEURE

9.1. The Parties to the Contract shall be released from the responsibility for failure to perform or non-perfect performance in case of force majeure. The following events, beyond the Parties control are to be considered as Force Majeure: a natural phenomenon that is not reasonably foreseeable, embargo, war, requisition, pandemic, acts of war, embargoes or governmental restrictions; provided the Parties have exercised reasonable diligence to avoid such events.

9.2. The Force Majeure event shall exclude the liability of the Party concerned to such extent only that is excusable by the nature of the Force Majeure event and the duration thereof. Any penalties or payment constraints that would be imposed shall be delayed or extended by the amount of time the Force Majeure circumstances are in effect and reasonably mitigate possible damages. Additionally, the affected Party shall provide the other Party with a proposed schedule of actions to be undertaken by this Party in order to mitigate the effects the Force Majeure event on the performance of this Contract for the consideration of the other Party.

9.3. The Parties shall show utmost care if the Force Majeure event occurs to minimize impact of the Force Majeure event on execution of the present Contract.

9.4. If the event of Force Majeure occurs, the First Party (the party incapable of perfect performance) shall immediately notify the Second Party in writing, stating the nature of the Force Majeure event, the date of occurrence and the estimated length of the delay caused by the event, the reasons for the event of Force Majeure preventing the First Party from, or delaying that Party in performing its obligations under this Contract.

9.5. Upon completion of the event of Force Majeure the Party affected must as soon as reasonably practicable recommence the performance of its obligations under this Contract. Nevertheless, if the Force Majeure event prevents perfect performance of the First Party longer than three months, the Second Party shall have the right to rescind the Contract. In such case the Parties shall return each other everything what has been rendered hereunder.

10. THE LAW OF THE CONTRACT

10.1. All matters not regulated in this Contract shall be governed by the provisions of United Nations Convention on Contracts for the International Sale of Goods and Austrian Substantive Law.

DS

Docusign Envelope ID: D1328ABD-166C-40C3-9485-A06A729A7BB7

The above mentioned law and Convention shall be applicable also in case of dispute.

10.2. In case of any dispute arising out of interpretation or realization of this Contract, or regarding its validity, the Parties agree to use every endeavor to resolve it amicably. In case of no solution being found within two (2) months from the commencement of such negotiations following the notice of one Party requesting the other to start negotiations, the Parties agree that all disputes or claims arising out of or in connection with this contract including disputes relating to its validity, breach, termination or nullity shall be finally settled under the Rules of Arbitration of the International Arbitral Centre of the Austrian Federal Economic Chamber in Vienna (Vienna Rules) by three arbitrators appointed in accordance with the said Rules. The language of arbitration shall be English language. The place of arbitration shall be Vienna. Each of the Parties regards the verdict of the Arbitration Court as final and waives any right of challenge against it under any jurisdiction and shall be obliged to execute it voluntarily.

11. PACKING

11.1. The Seller shall be responsible for adequate packing and protection of the Equipment suitable for road, air or sea transport. The cost of this is included in the Total Price.

11.2. The wood used in the process of packing and preparing the Equipment for the transport has to be fumigated in accordance with the Regulation of Wood Packaging Material in International Trade - Revision of ISPM No. 15. Pallet and crate description shall be in line with provisions of aforementioned Regulation.

11.3. In case of non - conformance with provisions of the above-mentioned Regulation, the Seller shall be obligated to cover additional costs connected with the import procedures associated with the use of improperly prepared wood.

12. START UP AND COMMISSIONING

12.1. The Seller is obliged to send his technician within four (4) weeks after being notified by the Buyer that the Equipment as indicated in par. 1.1 above, is ready for installation, start-up and commissioning.

12.2. Following the conclusion of the commissioning period, the Final Acceptance Test for the Equipment shall be run and the Final Acceptance Test Protocol shall be signed upon a successful Final

Docusign Envelope ID: D1328ABD-166C-40C3-9485-A06A729A7BB7

Acceptance Test. The Final Acceptance Test shall be performed and Final Acceptance Test Protocol shall be signed. Separate Final Acceptance Test shall be conducted for each piece of Equipment listed in par. 1.1.1-1.1.4.

12.3. During the Final Acceptance Test proper working of Equipment, product quality, efficiency and conformity to the contractual requirements will be measured. Final Acceptance Test shall last forty-eight (48) hours of continuous running and efficiency shall achieve at least the level of 85%.

12.4. If on the 10th day following the arrival of the Seller's technician to begin installation, start up and commissioning of any of the Equipment, the Final Acceptance Test has not been successfully completed due to circumstances attributable to the Seller, the Seller's technician shall remain on site at the Seller's expense for as long as it is necessary to complete the Final Acceptance Test successfully and sign and accept by the Buyer the Final Acceptance Test Protocol.

12.5. If however the Equipment cannot achieve the contractual parameters and efficiency, as indicated in par. 12.3, due to the reasons attributable to the Buyer, and not in any way related to malfunctioning or defectiveness of the Equipment, the Parties may execute the Conditional Acceptance Test Protocol, stating that the Equipment did not achieve full conformity with the contractual requirements stated in the Contract, nevertheless the Seller has allowed its commercial use before the full conformity is achieved. In such circumstances, the Seller is obliged to again send his technician within two (2) weeks after being notified by the Buyer that the Equipment is ready to be subject to the Final Acceptance Test, at the Buyer's expense. To avoid any doubt, the Contract is deemed to be duly performed by the Seller only when the Final Acceptance Test is executed.

12.6. If due to the circumstances attributable to the Seller, the Seller cannot execute successfully the Final Acceptance Test for each piece of Equipment within thirty (30) days of arrival of the Seller's technician to the Buyer's plant, it shall be deemed as a fundamental breach of the Contract. In that case, the Contract shall require an executive meeting between the Seller and the Buyer, including the Seller's Executive Vice President and anyone else deemed necessary by the Seller to be in attendance for the executive review. The purpose of the review will be discussion centered around resolution of the problems and could include the possibility of Contract rescission. Should the Parties fail to agree on solution of problems that occurred within two (2) weeks upon lapse of the 30-day period mentioned above, the Buyer, without prejudice of any rights it may have under

DS

Docusign Envelope ID: D1328ABD-166C-40C3-9485-A06A729A7BB7

the law, shall be entitled to rescind the Contract. In case of rescission of the Contract, the Parties thereto shall return each other any property or money that have been delivered or paid. The Buyer shall return obtained elements of the Equipment on the basis EXW, Buyer's plant where the Equipment is installed (Incoterms 2020). The rescission of the Contract shall be without any prejudice to any claim of either Party for indemnity because of breach of the Contract.

12.7. If, due to reasons attributable to the Buyer, following delivery of the Equipment pursuant to par. 2.1, the Equipment is being stored by the Buyer and the Parties are not able to perform the Final Acceptance Test and execute Final Acceptance Test Protocol (according to par. 12.2) or Conditional Acceptance Test Protocol (according to par. 12.5), the Seller shall have a right to request the Buyer to sign the Delivery Acceptance Protocol, template of which constitutes Enclosure No 5 hereto, containing confirmation of both Parties that the Equipment has been delivered, however it has not been installed, started-up or commissioned yet. In such case, the Buyer shall make payment specified in par. 4.1.3 within thirty (30) days following execution of the Delivery Acceptance Protocol. For the avoidance of doubt, each of the Parties agrees that releasing above payment by the Buyer does not in any way relieve the Seller from its responsibility for the compliance of the Equipment with the Contract and any and all Buyer's rights related to the warranties granted by the Seller based on the Contract are maintained. The Buyer shall notify the Seller about the possibility to perform Final Acceptance Test and, in case of positive result, execute the Final Acceptance Test Protocol, once the Equipment is ready for installation, start-up and commissioning.

2 The Buyer's representative responsible and authorized by the Buyer for verifying and accepting performance of the Equipment shall be Mr. Mirosław Hawran or Mr. Pawel Michalowski or Mr. Lukasz Dobrzanski.

13. CONTRACT COMING INTO EFFECT

This Contract comes into full force and effect as of the execution date stated above.

14. PLACE OF FINAL DESTINATION

The final destination of the Equipment ("Place of Destination") shall be one of the Buyer's manufacturing facilities located in South America. Exact location shall be provided by the Buyer one (1) month prior to date of delivery of the Equipment.

Docusign Envelope ID: D1328ABD-166C-40C3-9485-A06A729A7BB7

15. SANCTIONS CLAUSE

15.1. The Seller understands that sale, purchase, transfer, exportation or re-exportation, processing or transforming or other actions related to the Equipment, including transfer, exportation or re-exportation of the final product manufactured from the Equipment, may be subject to export control and embargo laws, imposed, administered or enforced from time to time by the United States, the United Nations Security Council, the European Union, the United Kingdom, the country of incorporation of a Seller or Buyer, or the respective governmental institutions of any of the foregoing including, without limitation, HM's Treasury, the Office of Foreign Assets Control of the US Department of the Treasury, the US Department of Commerce, the US Department of State and any other agency of the US government and the respective governmental institutions of the country of incorporation of the Buyer ("Sanctions Authorities").

15.2. The Seller will not knowingly import or purchase, directly or indirectly, any Equipment or components of the Equipment from any person (individual or entity) sanctioned by Sanctions Authorities or from any country on which the Sanctions Authorities imposed sanctions or embargo or requires an export license or governmental authorization without first obtaining such a license or authorization. For compliance with this clause, the following websites may assist the Seller in determining whether there exist restrictions:

15.2.1 In respect to US Sanctions: https://www.trade.gov/data-visualization/csl-search;

15.2.2 In respect to EU Sanctions: https://www.sanctionsmap.eu/;

15.2.3 In respect to UK Sanctions: https://sanctionssearchapp.ofsi.hmtreasury.gov.uk/.

The Seller confirms that it understands and acknowledges that the above-referenced websites are not the only source of information about the restrictions on export and it will consult with other sources and its legal counsel for obtaining advice on the restrictions.

15.3. The Seller confirms that as of the date of this Contract, the Seller has not been convicted of violating any criminal statute, been debarred, subject to an indictment, or otherwise charged with violating criminal statutes, or declared ineligible to contract with or to receive a license or other form of authorization or approval from any Sanctions Authorities, or subject to a policy of denial, suspension or revocation, identified on a restricted party list or generally ineligible to be involved in activities with the Buyer , and/or identified as a sanctioned person under the laws of European Union or other Sanctions Authorities ("SDN"/"Specially Designated Nationals").

DS

Docusign Envelope ID: D1328ABD-166C-40C3-9485-A06A729A7BB7

15.4. Seller further certifies that:

15.4.1 the Seller is not an entity that is owned 50% or more in the aggregate by one or more SDNs;

15.4.2 none of Seller's subsidiaries is an SDN or owned 50% or more in the aggregate by one or more SDNs;

15.4.3 Seller will immediately notify the Buyer in writing if there will be or is a change in ownership or other circumstance so as to result in inclusion of the Seller or any of its subsidiaries or shareholders on the SDN list or owned 50% or more in the aggregate by one or more SDNs.

Seller understands and agrees that an SDN status of the Seller or Seller's shareholders or subsidiaries may be considered as a Force Majeure event that gives the Buyer the right to immediately cease the purchase of the Equipment and terminate the Contract with the Seller with no liability.

15.5. The Seller represents that in performing of this Contract it will refrain from subcontracting any services to individuals or entities identified on a restricted party listing or subject to sanctions by a Sanction Authority, SDNs (as defined above) or persons owned 50% or more by SDNs, including but not limited to transporters, shipping lines, agents, brokers, distributors, warehouses, insurance companies, banks and financial institutions.

15.6. In case of sanctions on purchase, transfer, exportation or re-exportation, processing or transforming or other actions on the Equipment being introduced or reintroduced by Sanctions Authorities, the Buyer may be required to immediately cease procurement of the Equipment and wind down operations according to timeline prescribed by the Sanctions Authorities. In such event the Buyer has the right to immediately cease purchase of the Equipment and terminate the Contract with no liability, by sending a notice to the Seller.

16. OTHER CONDITIONS

16.1. The Seller and the Buyer declare that they shall act in good faith and shall exercise sound commercial judgment in the realization of this Contract.

16.2. Any changes to this Contract shall be made in written form and shall be approved by the Seller and the Buyer, otherwise being null and void. The Buyer and the Seller exclude any possibility to change the content of this Contract in the form of oral Contract.

DS

Docusign Envelope ID: D1328ABD-166C-40C3-9485-A06A729A7BB7

16.3. In case of discrepancy between this Contract and the law applicable, the provisions of this Contract shall prevail. If any provision or provisions of this Contract shall be held to be illegal, invalid or unenforceable, the legality, validity or enforceability of the remaining provisions shall not be in any way affected or impaired thereby. In case of any discrepancy between the Contract and the Enclosures attached hereof, the provisions of this Contract shall prevail and the order shall be as follows: the Contract and then the Enclosures.

16.4. This Contract rescinds all previously made arrangements between the Parties, both written and verbal, which are in breach or contrary with its provisions. The Seller and the Buyer state that apart from this Contract there are no other Contracts between them and that this Contract regulates all the matters agreed between the Seller and the Buyer.

16.5. The Seller shall indemnify and hold the Buyer harmless from and against all lawsuits, actions, legal proceedings, claims, damages and expenses of whatsoever kind (including attorney's fees and expenses) arising out of any breach by the Seller of any rights of any third party (hereunder copyrights, registered trademarks, patents or whatsoever) to the Equipment (including program, Documentation and any part thereof) and/or tooling supplied under this Contract and/or out of a breach of any such rights of a third party in connection with a method and/or process applied and/or products manufactured as a result of the use of such an Equipment or tooling. In addition to the foregoing indemnification, it is agreed and understood that the Seller shall, at its cost and expense, defend, indemnify, protect and hold the Buyer harmless from and against any and all claims arising out of or related to: a breach of applicable law, covenant, representation or warranty set forth in the Contract; a breach of relevant data protection legislation; the activities or omissions of the Seller, its employees, agents or subcontractors, in connection with the Contract, including but not limited to, negligence, wrongful act or misrepresentation, errors or omissions. The obligations under this clause shall survive the expiry or termination of the Contract. Should any of the above mentioned claims be filed against the Buyer or reported to him, the Buyer shall promptly notify the Seller thereof. In such a case the Seller shall have the right to participate in the legal proceedings, provided that in case of a voluntary acceptance of the claim, amicable settlement or the like imposing any obligation on the Buyer to pay, the Seller shall provide the Buyer with appropriate funds to secure payment in advance.

16.6. Without affecting any other right or remedy available to it, the Buyer may terminate this Contract on giving not less than 30-days written notice to the Seller. In such case the Seller shall promptly

DS

Docusign Envelope ID: D1328ABD-166C-40C3-9485-A06A729A7BB7

provide a written estimate of the cost and expenses incurred by the Seller under this Contact through the effective date of such termination, including, without limitation, costs for engineering and planning, costs for materials production and storage and the costs inherent to the resale of materials to third parties. In the event that such costs and expenses exceed amounts paid by the Buyer to the Seller hereunder to the termination date, the Buyer shall, within 30 (thirty) days of the effective date of such termination, reimburse the Seller for the amount of such excess, plus a 5% mark-up. There will be no reimbursement for any costs incurred by the Seller after the effective date of such termination.

16.7. This Contract has been made in English language and may be executed by electronic signatures in one or more counterparts, each of which shall be deemed an original as against any Party whose signature appears thereon, but all of which together shall constitute one and the same instrument.

16.8. The persons signing the Contract on behalf of the Buyer and the Seller are entitled to represent legally the companies and to enter into commitments in their names.

16.9. Each Party shall cover all its own costs incurred in connection with drawing up and concluding this Contract.

16.10. The Seller may not assign its rights under this Contract without prior written consent of the Buyer.

16.11. No general conditions of sales, general conditions of contracts or alike of any Party hereto shall be applicable.

16.12. In case of merger, division or any other transformations of any Party as of the merger date, the successor i.e. the acquiring company or the new company shall assume all rights and duties resulting from the present Contract of the Party being acquired or the companies or partnerships merging by formation of a new company. As of the merger date, the acquiring company or the new company shall take over, all the Seller's obligations resulting from this Contract.

16.13. The Seller shall in no way whatsoever divulge or disclose to third parties any information, methodology or material about the Buyer or his affiliated, dominant or dependent companies or his contractor and which was received by the Seller in the course of negotiation or realization of the present Contract, unless express permission to do so is given in writing form representatives of the Buyer or disclosure of such information is required by mandatory legal provisions specified

DS

Docusign Envelope ID: D1328ABD-166C-40C3-9485-A06A729A7BB7

in applicable legislation and is ordered by final and legally binding judicial verdict or decision of other authority and solely to the limit of the requested verdict or decision, each of them issued within the framework of competences of respective authorities.

16.14. The Buyer's engineering company to prepare the complete technology of producing two - piece beer and beverage cans and to cooperate with the Seller in all aspects of this Contract is:

ROESLEIN & ASSOCIATES, INC.
9200 SON ROAD, SUITE 200
ST. LOUIS, MISSOURI 63126-1528, USA**.**

16.15. The Buyer shall be entitled to assign any and all Buyer's rights hereunder to any Buyer's related entity. In case of sale or transfer of the Equipment to Buyers related entity, such Buyer's related entity shall be entitled to perform any and all Buyer's rights hereunder and raise claims towards the Seller as the Buyer.

The Parties to this Contract hereby declare that they are legal entities capable of independently Contracting binding obligations according to the law.

IN WITNESS WHEREOF, the Parties have signed this Contract on the date first above written. The persons signing below, on behalf of the Parties in a representative capacity expressly warrant that they have the appropriate authority to execute and bind this Contract on behalf of their respective principals or organizations.

DocuSigned by:
4F30549010D84FF...

DocuSigned by:
William Pena
BFB2165E88BE435...

THE BUYER - CANPACK Colombia S.A.S.

DocuSigned by:
Carolyn Crouch
6B46BBEACE1E4CA...
Vice President Sales

Signed by:
UNITED LIABILITY COMPANY 2003 DELAWARE
30-Jul-2025 | 6:25 AM MDT

THE SELLER – STOLLE MACHINERY COMPANY

Docusign Envelope ID: D1328ABD-166C-40C3-9485-A06A729A7BB7

ENCLOSURE NO. 1 TO CONTRACT NO. 25-149

I. Cupping System Rated 350 S.P.M. and typical operating speed of 285-300 S.P.M pending Die progression

ITEM I: CUPPING SYSTEM EQUIPMENT DESCRIPTION

A. One (1) Perfecto swing away, high-speed servo feed assembly

B. One (1) Feed mounted Apex Unist Lubricator

C. One (1) new DACH 165 Minster high-speed, double-action, Dynamically Balanced Hydro Statically Guided Cupping Press with hydraulic brake/clutch assembly.

D. One (1) floor Mounted Hydraulic Press lubrication and clutch system

E. One (1) set of four (4) press vibro pads

F. Stainless Steel air conveyor blower assembly

G. One (1) electrical control package. Complete electronic control package with Allen Bradley Control Logix. The control console and motor starter cabinet are included with this package.

H. Strong Arm Electrical Control Console System

I. Rittal or Hoffman Equivalent MCC enclosure with AC unit

J. Power Monitor System

K. One (1) lot guards for the press front, back and sides. Electrical interlock is provided to prevent the operation of press when protection devices are not in place.

L. One (1) lot press wiring. This item covers the labor and material for wiring base press junction boxes as received from the press manufacturer in order to provide the operational functions. Includes remote operation functions, top stop and E-stop push buttons on both the front and back of press.

M. One (1) lot press pneumatic plumbing. Labor and material required to completely plumb the base press in order to provide the necessary pneumatic functions required for the die design.

N. One (1) sets of die roll in rails

O. One (1) swing-away scrap hood for die

P. One (1) lot rigging, assembly and labor to include set up of system at our Canton site and operate at commercial speeds for customer acceptance.

Q. One (1) lot system documentation to include, buy off acceptance settings, equipment and die manuals, assembly drawings and bills of materials.

R. One (1) Magnetic Quad Clamping for inner slide with controls and safeties for quick die removal.

Docusign Envelope ID: D1328ABD-166C-40C3-9485-A06A729A7BB7

ITEM II.

S. One (1) Stolle Specially Designed Sixteen (16) out (269ml) Fit Cup Die Set complete with Stolle supplied carbide tooling for production of cups. Die set to incorporate **Patented Progressive Piston (non-sequential forming or blanking)** for reduction of press loads and vibrations and increased tool life.

Die set to include the following:

- Pneumatic stock plate assemblies with anti–rotation piston retainer assemblies
- Gun drilled die set for removal of die holder stock plate air fittings
- Hard chrome plated stock plates
- Internal scrap cutter assembly
- Stolle's patented **Progressive Piston and Cylinder** arrangement with S-7 shock steel components
- One (1) piece outer guide pin assemblies with automatic lubrication features
- One (1) piece inner guide pin assemblies with automatic lubrication features
- Nylon entrance rails with stand-alone stock guides
- Complete set of carbide wear tools including cut edges, blank and draw pad.
- Hydraulic assist package on inner punch for installation of die
- Inner draw punch adapters
- Registered, fixed blank and draw die retainers aligned to outer die shoe concentric to within .0005"
- Die set designed and machined for .020" web F/B – L/R
- Cup markers for marking the sheet prior to the blank and draw operation
- Die set machined for non-round cut edges and blank and draw dies
- Necessary mounting bolts and fasteners
- Indicating fixture

T. One (1) lot Sixteen (16) out air cup conveyor package with bottom mount sensors

DS

Docusign Envelope ID: D1328ABD-166C-40C3-9485-A06A729A7BB7

ITEM III:

U. One (1) Stolle Specially Designed Fifteen (15) out (33cl) Standard Cup Die Set complete with Stolle supplied carbide tooling for production of cups. Die set to incorporate **Patented Progressive Piston (non-sequential forming or blanking)** for reduction of press loads and vibrations and increased tool life.

Die set to include the following:

- Pneumatic stock plate assemblies with anti–rotation piston retainer assemblies
- Gun drilled die set for removal of die holder stock plate air fittings
- Hard chrome plated stock plates
- Internal scrap cutter assembly
- Stolle's patented **Progressive Piston and Cylinder** arrangement with S-7 shock steel components
- One (1) piece outer guide pin assemblies with automatic lubrication features
- One (1) piece inner guide pin assemblies with automatic lubrication features
- Nylon entrance rails with stand-alone stock guides
- Complete set of carbide wear tools including cut edges, blank and draw pad.
- Hydraulic assist package on inner punch for installation of die
- Inner draw punch adapters
- Registered, fixed blank and draw die retainers aligned to outer die shoe concentric to within .0005"
- Die set designed and machined for .020" web F/B – L/R
- Cup markers for marking the sheet prior to the blank and draw operation
- Die set machined for non-round cut edges and blank and draw dies
- Necessary mounting bolts and fasteners
- Indicating fixture

V. One (1) lot Fifteen (15) out air cup conveyor package with bottom mount sensors

Docusign Envelope ID: D1328ABD-166C-40C3-9485-A06A729A7BB7

ITEM IV:

W. One (1) Stolle Specially Designed Fourteen (14) out (355ml) Cup Die Set complete with Stolle supplied carbide tooling for production of cups. Die set to incorporate **Patented Progressive Piston (non-sequential forming or blanking)** for reduction of press loads and vibrations and increased tool life.

Die set to include the following:

- Pneumatic stock plate assemblies with anti–rotation piston retainer assemblies
- Gun drilled die set for removal of die holder stock plate air fittings
- Hard chrome plated stock plates
- Internal scrap cutter assembly
- Stolle's patented **Progressive Piston and Cylinder** arrangement with S-7 shock steel components
- One (1) piece outer guide pin assemblies with automatic lubrication features
- One (1) piece inner guide pin assemblies with automatic lubrication features
- Nylon entrance rails with stand-alone stock guides
- Complete set of carbide wear tools including cut edges, blank and draw pad.
- Hydraulic assist package on inner punch for installation of die
- Inner draw punch adapters
- Registered, fixed blank and draw die retainers aligned to outer die shoe concentric to within .0005"
- Die set designed and machined for .020" web F/B – L/R
- Cup markers for marking the sheet prior to the blank and draw operation
- Die set machined for non-round cut edges and blank and draw dies
- Necessary mounting bolts and fasteners
- Indicating fixture

X. One (1) lot Fourteen (14) out air cup conveyor package with bottom mount sensors

ITEM V:

Y. One (1) Stolle Specially Designed Thirteen (13) out (473ml) Standard Cup Die Set complete with Stolle supplied carbide tooling for production of cups. Die set to incorporate **Patented Progressive Piston (non-sequential forming or blanking)** for reduction of press loads and vibrations and increased tool life.

Die set to include the following:

- Pneumatic stock plate assemblies with anti–rotation piston retainer assemblies
- Gun drilled die set for removal of die holder stock plate air fittings
- Hard chrome plated stock plates
- Internal scrap cutter assembly
- Stolle's patented **Progressive Piston and Cylinder** arrangement with S-7 shock steel components

Docusign Envelope ID: D1328ABD-166C-40C3-9485-A06A729A7BB7

- One (1) piece outer guide pin assemblies with automatic lubrication features
- One (1) piece inner guide pin assemblies with automatic lubrication features
- Nylon entrance rails with stand-alone stock guides
- Complete set of carbide wear tools including cut edges, blank and draw pad.
- Hydraulic assist package on inner punch for installation of die
- Inner draw punch adapters
- Registered, fixed blank and draw die retainers aligned to outer die shoe concentric to within .0005"
- Die set designed and machined for .020" web F/B – L/R
- Cup markers for marking the sheet prior to the blank and draw operation
- Die set machined for non-round cut edges and blank and draw dies
- Necessary mounting bolts and fasteners
- Indicating fixture

Z. One (1) lot Thirteen (13) out air cup conveyor package with bottom mount sensors

ITEM VI: COIL HANDLING EQUIPMENT (Set up Initial Configuration)

A1. Coil Handling Equipment

- Perfecto Model UTH308074 Traversing Upender
- Perfecto Model LC30NR Coil Car
- (1) Perfecto Model RD308074M Double End Uncoiler
- (1) Perfecto Model MS74 Material Stand
- Interconnect Cables
- weight Scale
- CE Certification

Note: Weight Scale does not go trough PLC. It has its own readout and will show up on HMI

C1. Die Set Safety Turnover Unit

The fixture is designed to turn over all 3 plates of the die set individually. For loading the plates into the DIE plate cradle adaptor bars are used. The frame is lifted and placed over the die plate with a forklift truck, to allow accessibility if required the lifting pockets have been made detachable.

Docusign Envelope ID: D1328ABD-166C-40C3-9485-A06A729A7BB7

The fixture must be fixed to the floor while it is being used for safety and a safe floor area must be marked around the fixture. It is supplied with predrilled holes and the floor fixing to attach it.

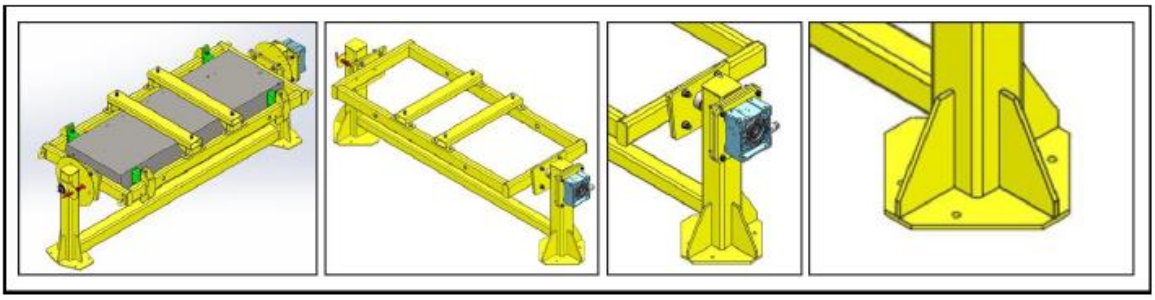

The project cost is based on existing engineering. If the scope of the project is altered by the customer, Stolle reserves the right to adjust the cost and/or delivery schedule to accommodate the changes. If the customer is to incur additional expense for the project, Stolle will submit an estimate for approval prior to proceeding. Note, shipping charges to be prepaid and invoiced. Work will not begin work on this project until a correct (hard copy) purchase order payment is received.

D1: Critical Spares-15 Out (269) FIT

- (3) Cut-Edge
- (3) Blank & Draw Die
- (3) Draw Pad
- (3) Die Center
- Set of Seals

E1: Critical Spares 15-out 33cl

- (3) Cut-Edge
- (3) Blank & Draw Die
- (3) Draw Pad
- (3) Die Center
- Set of Seals

F1: Critical Spares 14-out (355cl)

- (3) Cut-Edge
- (3) Blank & Draw Die

- (3) Draw Pad
- (3) Die Center
- Set of Seals

Docusign Envelope ID: D1328ABD-166C-40C3-9485-A06A729A7BB7

G1: Critical Spares 13-out (473cl)

- (3) Cut-Edge
- (3) Blank & Draw Die
- (3) Draw Pad
- (3) Die Center
- Set of Seals

Docusign Envelope ID: D1328ABD-166C-40C3-9485-A06A729A7BB7

II. Nine (9) STANDUN BOBYMAKERS

Docusign Envelope ID: D1328ABD-166C-40C3-9485-A06A729A7BB7

SECTION 1: STANDARD BODYMAKER DESCRIPTION

The Standun is the only Bodymaker designed for easy conversion to produce the most popular beverage can sizes up to 500ml. Production speeds determined by the tool pack length, can diameter, Bodymaker mechanical configuration, as well as plant process controls.

Description	*B6-B7*
Stroke	24 inches
Width	6 feet
Height	7 feet
Length	13 feet, 5 inches
Weight	19,500 pounds
Foundation	Floor Level
Speed	Up to 300-400 strokes per minute (See Note 1 below)
Toolpack Length	TBD
Can Diameter	211 and 204
Max. Untrimmed Can Height (aluminum)	TBD

Standard Mechanical Features of a Standun Bodymaker include:
Equipment runs a single diameter length can for aluminum with one set of lifting swivel hoists, can discharge conveyor, foundation mounting hardware, and built to CE safety standards with English language signs/literature.

**Note 1 – The Standun Bodymaker speed is rated in Strokes Per Minute (SPM). This is the Engineered MAX Speed the Mechanical Systems in the Machine are rated to. This Rating is WITHOUT the process inputs or material in the plant. And those items will ultimately determine the OPERATIONAL Speed of the machine. And it is the plants resposibility to determine the most efficent Speed during Operation in the plant.*

Includes:

- ✓ Mist Collection Point
- ✓ Flanged Ram
- ✓ Pride Domer Assembly
- ✓ Pneumatic Clutch Brake (Goizper)
- ✓ Poly Insert Type Stripper
- ✓ Pride Modular Tool Pack
- ✓ On-Machine Hydraulic Package
- ✓ Carbide Face Fixed Redraw Sleeve

Customer should select one (1) option for each category below:

Machine Hydraulics:	*Ram:*	*Trimmer Type:*
On-Machine Hydraulics to be provided unless noted.	Flange Ram is provided for 2.5" and 2" can diameters unless noted.	☐ Stolle ☐ Belvac ☐ CMB

Docusign Envelope ID: D1328ABD-166C-40C3-9485-A06A729A7BB7

Standard Electrical Features of a Standun Bodymaker include:
Allen Bradley Safety PLC, high-speed logic functionality integrated in PLC program, interconnect cables between panel & machine (100 ft.), capable of operating in 50-degree C ambient temperature with NEMA frame motors, Brady heat shrink wire markers, & power wires will be sized according to load.

Includes:

- ✓ Allen Bradley Control Logix L8ES & L8SP PLC
- ✓ Studio5000 Version 31 program, and FactoryTalkView Machine Edition Version 8.2
- ✓ (2) 1756-EN2T Ethernet modules: (1) Line Control/Data Collection & HMI, (1) VFD's and Point I/O
- ✓ Integrated Programmable Limit Switch functionality using AMCI 8213 Resolver Interface module
- ✓ AMCI HT-400 Resolver
- ✓ Allen Bradley 1734 series Point Guard I/O modules using CIP Safety protocol over Ethernet/IP (mounted on machine and operator console)
- ✓ Main Circuit Breaker: Allen Bradley 140 Series w/ flange mounted cable operator
- ✓ 24V DC Power Supply: Allen Bradley 1606 series w/ 3 phase input
- ✓ Door Mounted Network Interface: Grace Port with Ethernet & 5-amp GFCI service outlet
- ✓ Allen Bradley 700S-CF & 100S-C series safety control relays & contactors
- ✓ Allen Bradley 700-CF & 100-C series non-safety control relays and contactors
- ✓ Allen Bradley 140M Series motor circuit protection
- ✓ Allen Bradley 1492 / 1489 Series circuit breakers as appropriate
- ✓ Pilz 777949 for AC Drive applications Back EMF style for Trimmer motion detection
- ✓ Electrically Timed Air Strip (MAC 56 series solenoid valve)
- ✓ Main Drive VFD: Allen Bradley PowerFlex 755 with Safe-Off feature & Ethernet/IP
- ✓ Trimmer Drive VFD: Allen Bradley PowerFlex 525with Safe-Off feature & Ethernet/IP
- ✓ Hoffman Spectracool control panel air conditioner
- ✓ Hoffman NEMA type 12 control panel
- ✓ Sencon smart prox w/ BCM 387 module short can sensor
- ✓ Euchner CET-AR solenoid latching guard switches
- ✓ Allen Bradley 194E series with black/gray lockable handle & aux contact machine mounted motor disconnects
- ✓ Allen Bradley 800TC series (30mm) pushbuttons & LED indicators
- ✓ Sourcing (PNP) 24VDC sensor wiring standard
- ✓ Inductive prox sensors: Turck
- ✓ Pressure Sensing: IFM Efector PP series – I/O Device Link
- ✓ Flow Sensing: IFM Efector SM & SI series flow meters
- ✓ Status Beacon (24V DC): Allen Bradley 856T (Red / Amber / Green)
- ✓ Terminal blocks (sized according to wire gauge and load requirements): spring cage on control (Allen Bradley 1492-L series), screw terminal for power (Allen Bradley 1492-J series)
- ✓ Floor standing operator console – Allen Bradley Panel View Plus 7 Standard 1000 HMI on Ethernet
- ✓ Motors: NEMA (inch frame) Toshiba EQP III – Main Frame 75HP / Main Pump 15HP / Recirculation Pump 2HP

DS

Docusign Envelope ID: D1328ABD-166C-40C3-9485-A06A729A7BB7

SECTION 2: ADDITIONAL MACHINE OPTIONS

Selected	*Mechanical Options*
☐	Stripper: LPT Ceramic (Lieb)
☒	Interconnecting crossover gravity trackwork with SS guard $25,345.00 each
☐	Redraw Sleeve: Ceramic Face
☒	Domer Assembly: CMB Domer Assembly $12,000.00 each
☐	Domer Spring: Yellow (Ram Control)
☐	Domer Spring: Red (Low Shock)
☐	Domer Spring: Blue (High Strength)
☒	Foundation Anchor assembly template
☐	Hydraulic Cart with locking casters
☐	Pride Guardian On Machine
☐	Machine Certifications: (i.e. CE, NR12, UL, GCC) *The Standun Bodymaker Machine Certification is your guarantee of compliance with the Directives on the approximation of the laws of the Member States relating to machinery for any specific certification requested.* *Consists of:* ✓ *Machine Safety Assessment and Performance Evaluation* ✓ *EMC Performance Evaluation; Audible Performance Levels Testing* ✓ *Dual Language Translations for display & PB legend plates*

DS

Docusign Envelope ID: D1328ABD-166C-40C3-9485-A06A729A7BB7

Selected	Electrical Options
☐	IEC (inch frame) ABB *(Alternate Standard Equipment, Required for CE)*
☐	Fortress interlock solenoid latching guard switches
☐	No motor controls on HMI
☐	4 pole main circuit breaker
☐	65 kAIC rated main panel
☐	Rittal control panel air conditioner
☐	DC Power Supplies sized for 200% of Load
☐	Rittal control panel
☐	Remove Interconnect cables between panel & machine
☐	Screw terminal for control and power *(Included w/ CE certification)*
☐	EU wire color standard *(Included w/ CE certification)*
☐	Permatex Partex Type PA wire labels
☒	Short Can Sensor: Sencon 487 programmable Smart Prox.
☐	Short Can Sensor: Steel Cans – Sencon # 11-267-03
☒	Inch Station $1,900.00 each
☐	Non-Standard Wire Colors
☒	Utility Monitoring Package: $7,440.00 each *Consists of:* ✓ *Allen Bradley series 1408 Power Monitor 1000* ✓ *IFM Efector SD series compressed air flow & vacuum flow monitor for Trimmer*
☒	Allen Bradley Articulated Pendant $8,000.00 each *Consists of:* ✓ *StrongArm articulated pendant (floor or overhead mount)* ✓ *Allen Bradley Panel View Plus 700 on Ethernet*
☒	Additional Language (Manual & Tags) Each **(Specify on – Project Details)** *Equipment manuals can be provided in English, German, Spanish, French, Portuguese or Chinese for no additional cost. Manual translations in all other languages may incur additional charges.*

DS

Docusign Envelope ID: D1328ABD-166C-40C3-9485-A06A729A7BB7

SECTION 4: TOOLS & FIXTURES

Selected	Logistics	Price (USD)	Qty.
☒	Mandatory Tools & Fixtures	$19,340.00	1
☒	Recommended Additional Tools & Fixtures	$20,450.00	1
☐	Punch Cross Hatch Machine		
☐	Pride Guardian II Portable Unit		

III. Two (2) Standard 36MRT Decorator with 8 ink stations

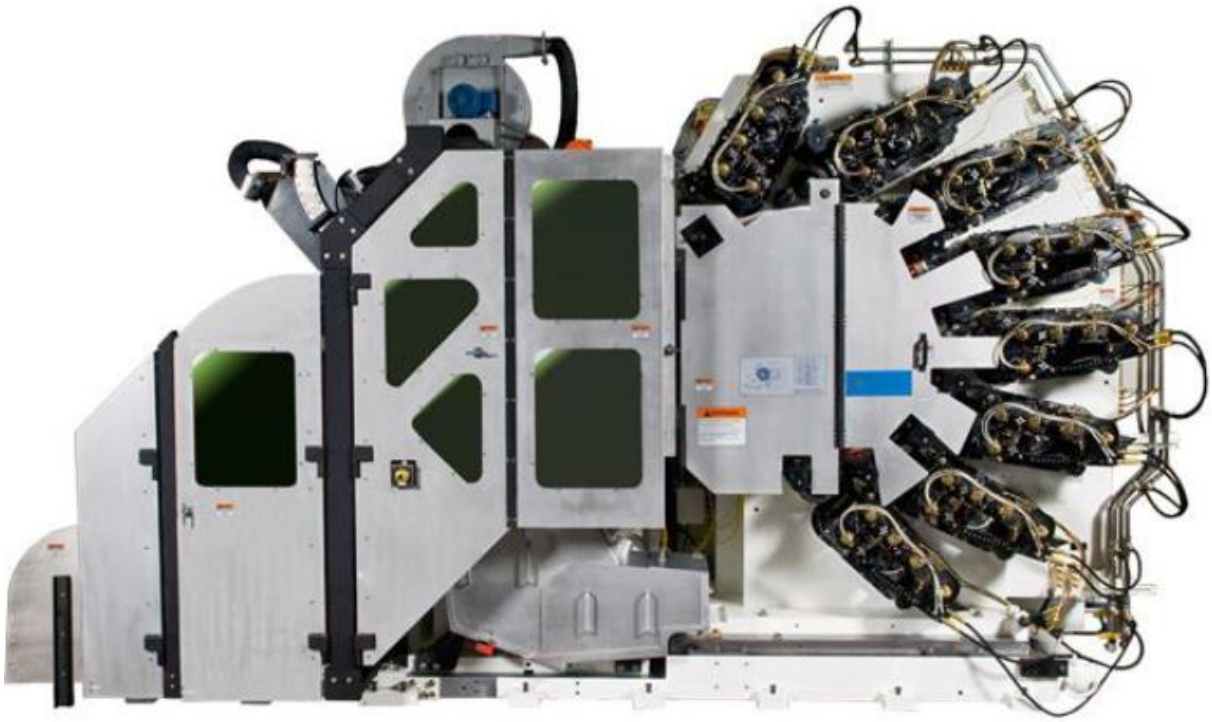

Docusign Envelope ID: D1328ABD-166C-40C3-9485-A06A729A7BB7

STANDARD FEATURES

STANDARD MECHANICAL FEATURES:	
1. Can size operating speed	2,200CPM 211X355ml
2. Mandrels	36
3. Mandrel material	Light-weight steel self-aligning
4. Mandrel trip	Single mandrel (rotary trip)
5. Trip arm pivot	Needle bearing with lube
6. Inkers	8 interchangeable with mechanical drive.
7. Inker cooling	Inkers equipped to accept optional chillers
8. Oil cooling	Ink station main frame & critical gearboxes
9. Infeed	Air assist (5 HP blower) adjustable
10. Can stop	Pneumatic
11. Plate cylinder	Light weight magnetic
12. Running registration	Included
13. Blanket wheel	12 segments
14. Overvarnish unit	Reverse type 10 HP AC Vector Duty
15. Overvarnish pre-spin	Flat Belt
16. Overvarnish day tank	8 gallon with pump
17. Transfer	36 suction heads
18. Oven drive clutch	Included
19. Guards	Interlocked
20.	
STANDARD ELECTRICAL FEATURES:	
1. Main Motor	100 HP AC TEBC – Inverter duty with mechanical drive inkers.
2. Drive	Allen Bradley power flex 755
3. Logic	Control Logix
4. Timing Device	PLS – integrated in PLC
5. Tropicalized motors	Included
6. Interconnecting cables	Included
ELECTRICS:	
460V/3PH/60Hz or as specified by Buyer	

Docusign Envelope ID: D1328ABD-166C-40C3-9485-A06A729A7BB7

Change parts

Change Parts Size	211 diameter		211x355
	Price	**Qty**	**Extended**
Adjustable infeed	$17,000	2	$34,000
Mandrels light wt. self-align	$820	76	$62,320
Quick change pockets set 36 mandrel	$9,900	2	$19,800
Applicator roll tire 1 ea.	$2,300	2	$4,600
Gravure roll	$5,400	0	$0
Fountain	$8,500	0	$0
Tooling	$2,100	2	$4,200
Total			$124,920
Change Parts Size	Addational 211 size		211x33
	Price	**Qty**	**Extended**
Mandrels light wt. self-align	$820	76	$62,320
Quick change pockets set of 36	$9,900	2	$19,800
Applicator roll tire 1 ea.	$2,300	2	$4,600
Total			$86,720
Change Parts Size	sleek and slim		211x473
	Price	**Qty**	**Extended**
	Price	**Qty**	**Extended**
Mandrels light wt. self-align	$820	76	$62,320
Quick change pockets set of 36	$9,900	2	$19,800
Applicator roll tire 1 ea.	$2,300	2	$4,600
Total			$86,720
Change Parts Size	Lengh sleek and slim		204x269 (202)
	Price	**Qty**	**Extended**
Mandrels light wt. self-align	$870	76	$66,120
Quick change pockets set of 36.	$9,900	0	$0
Applicator roll tire 1 ea.	$2,300	0	$0
Total			$66,120

IV. DG 250 Inside Spray Machines

Docusign Envelope ID: D1328ABD-166C-40C3-9485-A06A729A7BB7

DG 250 Inside Spray Machines

- DG 250 Inside Spray Machines - *Ten single machines*
- Starwheels- two per machine- *UHMW solid starwheel*
- Guns- two per machine - *Nordson MEG II*
- Lacquer Pressure Control - *Nordson Spray Pressure Control w/ Dual Filters for Ten machines*
- Rittal 5 Bay Control Pnl with A/C - *Included*
- ITrax - *Nordson Itrax SC and SM modules for Fourteen (14) machines*
- iTrax Discharge Can Stops - *Included for Ten (10) machines*
- iTrax PRx (Servo Pressure Regs & Transducers) - *Included for Ten (10) Machines*
- Control Panel - *Single Panel for Fourteen (14) machines*
- Cards – *Two (2) Ethernet Cards*
- Pumps – *Two (2) Dual Nordson EP pump w Stands & VFDs*
- Nordson Inkdot on machines – *not included*
- Nordson Inkdot Controls – *not included*
- Spray Material Day Tank - *Customer Supplied*
- Exhaust System Transition - *Included for Ten (10) machines*
- Piping, wires, cables and wire ways - *Customer Supplied*
- Spinner Motor VFD's - *Included for Fourteen (14) machines*
- Spray Gun Nozzles - *Included (Customer to supply part numbers)*
- Heater/TCU - *Dual Zone TCU Included*
- Utility Monitoring (Power, Air & Vac) - *Included*
- 204 Change Parts (26.9cl) - *Included for Ten machines*
- Set-Up Gauges - *Included for 204 and 211 Can Diameters*
- 65 KAIC Main Disconnect - *Included*
- Can count logic - *Included*
- Tropicalized Motors - *Included*

Docusign Envelope ID: D1328ABD-166C-40C3-9485-A06A729A7BB7

Description

INSIDE SPRAY SYSTEMS	Individual Tall Cabinet ISMs
DG 250 inside sprays	Dual gun
Speed	Estimated machine speed is 350CPM on 211 Can Diameter, max Can speed is Spray Time and Can Size dependent
Piping, air, vacuum and spray	Customer Supplied
Pumps	EP Pumps Included
Can Height (max) **Can Diameter**	710 211
Platform	Customer Supplied

FEATURES

MECHANICAL FEATURES:	
Guards	Stainless Steel Glass enclosed, and interlocked
Filter	Dual filter supplied
Gearbox	Camco index
Pumps	Nordson EP Pumps
Starwheels	Solid, UHMW
Gun Mounts	Swing away
Exhaust	Transition Only
Guns	Nordson MEGII Guns (2)
Platform	Customer Supplied
Heater/ Cooler	Dual Zone TCU
Vacuum filter	Included
Can stop	Included
Vacuum saver valve	Included
Operator manual	One standard manual- Electronic Copy
Nozzles	Included (Customer to supply part numbers)
ELECTRICAL FEATURES:	
Panel	Hoffman panel sized for quoted number of machines
- Controls	Allen Bradley Control, Nordson gun drivers
- Timers	PLC
- Relays	Allen Bradley 700 series
- Drives	Allen Bradley
Controls	Allen Bradley Control, Nordson gun drivers
Operator panel (HMI)	Pushbutton station at each machine
Motors	1 HP main drive, 1/3 HP spinner drive
Gun drivers	Nordson
ELECTRICS:	
Line	As specified
Control	24 VDC

Docusign Envelope ID: D1328ABD-166C-40C3-9485-A06A729A7BB7

ENCLOSURE NO. 2 TO CONTRACT NO. 25-149

1. The Seller shall provide to the Buyer the following documentation for the Equipment:
   1.1. The General Arrangement Drawings shall show general arrangements of the equipment, and piping, wiring and method of assembly. These drawings will be returned to the Seller marked „Accepted" or „Revision Required". In case of revision of the drawings by the Buyer is required, the Seller shall agree the drawings with the Buyer and obtain its acceptance. Acceptance of the drawings will, in no way, relieve the Seller from the responsibility of supplying properly designed Equipment in compliance with the specification indicated in the Contract and Enclosures thereto on the delivery date indicated in the Contract. In the event of acceptance the drawing by the Buyer, no changes shall be made to the general arrangement of the Equipment covered by the Contract without written notification to the Buyer.
   1.2. After acceptance by the Buyer the Seller shall provide to the Buyer two (2) sets of the Documentation defined in point 1.1.
   1.3. Validated Drawings: Upon receipt of General Arrangement marked „Accepted" by the Buyer, the Seller shall submit two (2) sets of validated electrical and mechanical drawings to the Buyer. The following are to be received by the Buyer no later than 12 weeks after signature of this Contract.
      - Panel Wiring Schematics
      - Equipment Wiring Schematics
      - Control Panels, Dimensions and Locations
      - Power Panels, Dimensions and Locations
      - Junction Boxes, Dimensions and Locations
      - Miscellaneous Electrical Panels, Dimensions and Locations
      - All Additional Miscellaneous Electrical Drawings Not Previously Addressed
      - Bolt hole Patterns, Size and Dimensions Layout and Gross Weight of Equipment Within Ten (10) Percent
      - Can Conveyance Interface Locations (Outfeed and Infeed), as Applicable
      - Utility Connections (Pipe Size and Well Defined Locations), For Vacuum and compressed Air, Water, Hot Water, Caustic/Chemical, Lubes, Electrical, etc., as required.
      - Installation Drawing and Equipment Assembly Technical information

      If there are revisions requested by the Buyer of validated drawings, the Seller shall supply updated drawing within 4 weeks from „Revision Requested".

   1.4. Final As Built Drawings:
      1.4.1. Upon delivery of equipment as agreed upon in the Contract, the Seller shall supply the Buyer with one (1) set of all electrical and mechanical drawings and the Equipment PLC program to represent the Equipment „as built", four weeks after Equipment ship date.

   1.5. Operation and Maintenance Manual Requirements:
      The Seller shall provide to the Buyer three (3) sets of operation and maintenance manuals for each type of Equipment ordered in Spanish and English Language, to be received no later than six (6) weeks after buy – off of the Equipment:
      The above shall include, but not be limited to, the following:
      - Description: A detailed description of the Equipment function and sequence of operation of Equipment.

DS

Docusign Envelope ID: D1328ABD-166C-40C3-9485-A06A729A7BB7

- Adjustments: A complete description of each adjustment, including the timing of each function, the proper setting for all utilities, flow rates, proper tooling settings and electrical timing diagrams.
- Troubleshooting: A complete listing of operational problems, their cause and the remedy, as well as the resulting effect on the finished product.
- Operation and Maintenance: A complete comprehensive set of start up, operating and shut down instructions shall be included. This section shall also cover required schedules of routine maintenance lubrication. A schematic of the lubrication system shall be provided indicating all points of lubrication. A recommended type and supplier of lubricating materials shall be included. Recommendations for preventative maintenance frequency and special tasks shall also be included.

1.6. A list of recommended spare parts for one (1) year of operation shall be provided to the Buyer ten weeks (10) from the receipt by the Seller from the Buyer, the Buyer's product drawing (can/cups) Drawings with specification.

Docusign Envelope ID: D1328ABD-166C-40C3-9485-A06A729A7BB7

Enclosure no 3 to the contract 25-149

SMQ-07315.1	One (1) Dynaform 165 Cupping System with Two(2) sets of Fifteen (15) out (269ml) Fit Cup Die Set, Fifteen (15) out (33cl) Standard Cup Die Set, Fourteen (14) out (355ml) Cup Die Set, Thirteen (13) out (473ml) Standard Cup Die Set and complete coil handling system with Die set safety turnover unit and Critical Spares	1	5 885 310,00	5 885 310,00
SMQ-07316.0	Two (2) 36MRT Concord Decorators with 8 ink stations set up for primary can 204x269ml with selected optional items and change parts 204/202x269, 211x33, 211x355, 211x473	2	2 802 080,00	5 604 160,00
SMQ-07358.0	Ten (10) individual DG250 Tall Cabinet Spray with Controls for twelve machines to run 211x33cl, 35,5cl & 47,3cl Can Diameters	1	1 963 735,00	1 963 735,00
SMQ-07321.0	Nine (9) B626 Bodymakers for primary can size 211x33cl and additional can size options 211x35,5cl, 211x47,3cl, 204x26,9cl	9	660 382,56	5 943 443,00
				19 396 648,00

Docusign Envelope ID: D1328ABD-166C-40C3-9485-A06A729A7BB7

ENCLOSURE NO. 4 TO CONTRACT NO. 25-149

STOLLE MACHINERY

Stolle Machinery Co, LLC

NOTICE

Dear Stolle Machinery Customers:

When making payments to Stolle Machinery Company, LLC, Please use the following information:

SEND CHECKS ONLY TO:

Stolle Machinery Company, LLC
7329 Solution Center
Chicago, IL 60677-7003

FOR REMITS BY NEXTDAY COURIER:

Stolle Machinery Co, LLC
Lockbox Number 777329
350 East Devon Avenue
Itasca, IL 60143

****

SEND WIRE TRANSFERS TO:

BANK ADDRESS:	SUMITOMO MITSUI BANKING CORP. LOS ANGELES 601 S. Figueroa Street, Suite 1800 Los Angeles, CA 90017 U.S.A
ACCOUNT NO.	4531689170
ABA ROUTE NO.	122041594 (Wires)
ABA ROUTE NO.	122041594 (ACH)

*** When using an ACH payment method, please provide details of payment to your account representative)

BENEFIT:	Stolle Machinery Company, LLC
S.W.I.F.T	SMBCUS33

PLEASE REVIEW ALL YOUR RECORDS AND CORRECT.

Rodrigo Pizani
Corporate Executive V.P. Finance
Stolle Machinery Company

DS

Docusign Envelope ID: D1328ABD-166C-40C3-9485-A06A729A7BB7

ENCLOSURE NO. 5 TO CONTRACT No. 25-149

DELIVERY ACCEPTANCE PROTOCOL
in accordance with CONTRACT NO. 25-149

date……..

Buyer:
CANPACK Colombia S.A.S.
Tocancipa (Cundinamarca), Km 1.5 Via Briceno
Zipaquira Vereda Verganzo S. Tibitoc, Colombia

Seller:
STOLLE MACHINERY COMPANY LLC
6949 South Potomac St.
Centennial, CO 80112-4036, USA

CANPACK Colombia S.A.S and STOLLE MACHINERY COMPANY LLC, hereinafter referred to as the "Parties", hereby confirm that the following pieces of the Equipment indicated in par. 1.1 of the Contract:

have been delivered pursuant to par. 2.1 of the Contract, however they have not been installed, started-up or commissioned yet.

Notwithstanding the above, the Parties agree that the Buyer shall make payment specified in par. 4.1.3 of the Contract, i.e. in the amount of 10% of the price of a piece of Equipment being subject to this Delivery Acceptance Protocol, within thirty (30) days following execution of this Delivery Acceptance Protocol, even though the Final Acceptance Test has not been performed as determined in Section 12 of the Contract No. 25-149.

For the avoidance of doubt, the Parties agree that effecting by the Buyer of the above payment does not in any way relieve the Seller from its responsibility for the compliance of the Equipment with the Contract and that any and all Buyer's rights related to the warranties granted by the Seller based on the Contract are maintained.

For CANPACK Colombia S.A.S

For STOLLE MACHINERY COMPANY LLC

DS